PandolfoAlluminio

PROFILES

Padova-Italy Corporate Headquarters

Since 1969 Pandolfo Alluminio operates in the aluminium extrusion sector and has constantly upgraded its products and services. With the expansion of the extrusion site, the range of processes was extended with anodizing and powder-coating lines and through the introduction of a modern machining shop, equipped with state-of-the-art numerical control machining centres. Today, the Company continues to pursue the same path through continuous investment in technology and know-how, aiming toward expanding product range and improving its logistics service standard.

The company headquarters and registered site are near Padua (Italy). The extrusion plant is located in Lentiai – Borgo Valbelluna (Belluno), while surface treatment, anodizing, powder coating and machining facilities, along with sales and accounts offices, are located in Feltre (Belluno), a few kilometres from the extrusion site.

ISO 9001:2015

ISO 14001:2015

Quality, along with continuous corporate, product and process improvement, are among core values of Pandolfo company policy. The high and constant level of quality assured by Pandolfo Alluminio is a reflection of the company's UNI EN ISO 9001:2015 and ISO 14001:2015, certification, issued by TÜV.

Pandolfo Alluminio Integrated system

Pandolfo Alluminio is an integrated system responding to customers' needs. Our offering extends to all specific client requirements: we can supply a complete range of extruded products, from mill-finished stock to anodized or powder-coated profiles, to fully machined components. Additional services include custom packaging, assembly and direct shipments on behalf of our clients. Pandolfo offers you aluminium to your design and expectations.

Pandolfo Alluminio

Contents

1. General Notes

2. Profiles

Angles	8
Angles	9
Channels	10
T-sections	11
Double T-sections	12
S-sections	13
Round Rods	14
Square Bars	15
Hexagon Rods	15
Flat Bars	16
Flat Bars	19
Oval flat Bars	19
Square Tubes	20
Square Tubes	21
Rectangular Tubes	22
Rectangular Tubes	24
Round Tubes	25
Oval Tubes	27
Hexagon Tubes	27

3. Profiles for special purposes

Automation and Pneumatic	29
Furnishing	30
Air conditioning	31
Heat sinks	35
Signage	42
Awnings, shutters, blinds and shades	44
Others	46

General Notes

This catalogue gives a complete listing of Pandolfo Alluminio profiles available to existing customers and to the wider market.

Information

All orders should be faxed to the Sales Department at the number shown below, indicating article code, alloy, quantity in kg and length of bars.

Fax +39 0439 84 87 88

Alloys

The alloys available from Pandolfo Alluminio are shown on the following table. Designation conforms to European Standard EN 573-1. For details, the chemical composition is shown in agreement with EN 573-3.

LEGA	Si	Fe	Cu	Mn	Mg	Cr	Zn	Ti	Impurity Al Each	Total	
EN AW-6060	0,30-0,60	0,10-0,30	0,10	0,10	0,35-0,60	0,05	0,15	0,10	0,05	0,15	RESTO
EN AW-6063	0,20-0,60	0,35	0,10	0,10	0,45-0,90	0,10	0,10	0,10	0,05	0,15	RESTO
EN AW-6005A	0,50-0,90	0,35	0,30	0,5	0,40-0,70	0,30	0,20	0,10	0,05	0,15	RESTO
EN AW-6082	0,70-1,30	0,50	0,10	0,40-1,00	0,6-1,20	0,25	0,20	0,10	0,05	0,15	RESTO
EN AW-3103	0,50	0,70	0,10	0,90-1,50	0,30	0,10	0,20	0,10	0,05	0,15	RESTO
EN AW-1070A	0,20	0,25	0,03	0,02	0,02	-	0,07	0,03	0,03	-	RESTO

Standard profiles are supplied in alloy EN AW-6060. The use of one or another alloys shown on the table must be agreed with our Sales Department.

Temper designation

The metallurgical states are designated in compliancent with EN 515. Unless otherwise indicated on orders, the profiles are supplied in temper T6.

ALLOY	TEMPER	TENSILE FAILURE UNITARY LOAD RM (N/mm²)	YIELD STRENGHT LOAD RP 0,2 (N/mm²)	ELONGATION A (%)
(EN 573-1)	(EN 515)	(EN 755-2)	(EN 755-2)	(EN 755-2)
EN AW-6060	T4	120	60	16
	T5	140-160	100-120	8
	T64	180	120	12
	T6	170-190	140-150	8
	T66	195-215	150-160	8
EN AW-6063	T4	130	65	14
	T5	160-175	110-130	8
	T6	195-215	160-170	8
	T64	180	120	12
	T66	225-245	180-200	8
EN AW-6005A	T4	180	90	15
	T6	250-270	200-225	8
EN AW-6082	T4	205	110	14
	T5	270	230	8
	T6	290-310	250-260	8
EN AW-3103	F(*)	95	35	25
	H112	95	35	25
EN AW-1070A	F(*)	60	23	25
	H112	60	23	25

(*) "F" physical state values are purely informative.

Dimensions, shapes and weight

All dimensions indicated in the drawings of the catalogue are expressed in millimetres. To illustrate the geometry of single items more clearly, some drawings are on larger scale than others. Dimensional and geometrical tolerances are in conformity with standards of the EN 755 series relating to the specific shapes. Weights per linear metre listed in the tables of profiles are indicative in nature. The actual weight of the profile can change as a result of dimensional variations within the standard tolerance range.

ROUND BARS	EN 755-3
SQUARE BARS	EN 755-4
RECTANGULAR BARS	EN 755-5
HEXAGONAL BARS	EN 755-6
TUBES WITHOUT WELDING	EN 755-7
BRIDGE MATRIX TUBES	EN 755-8
PROFILES	EN 755-9

Surfaces Treatments

Profiles can be supplied with anodising treatment, electro-colouring or powder coating.
Numerous types of finishes and colours are available. Treatments are performed directly in the Pandolfo Alluminio facilities in modern anodising and powder coating plants.
For more details, please contact the Sales Department.

Pandolfo Alluminio
Sales Office export
Via Camp Lonc, 23
32032 Feltre (BL) Italy
Tel. +39 0439 84 87 85
Fax +39 0439 84 87 88
e-mail export@pandolfoalluminio.com

Standard Profiles

Pandolfo Alluminio

ANGLES

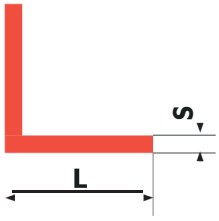

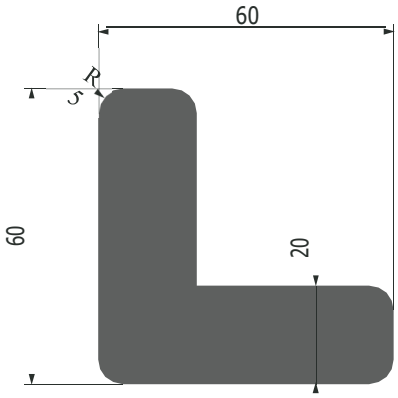

V 1000

Article	L mm	S mm	Weight kg/m
NL020X020X020	20	2	0,205
NL020X020X030	20	3	0,300
NL025X025X015	25	1,5	0,196
NL025X025X020	25	2	0,259
NL030X030X015	30	1,5	0,237
NL030X030X020	30	2	0,313
NL030X030X030	30	3	0,461
NL030X030X040	30	4	0,605
NL035X035X020	35	2	0,367
NL040X040X020	40	2	0,421
NL040X040X030	40	3	0,624
NL040X040X040	40	4	0,821
NL040X040X050	40	5	1,012
NL050X050X020	50	2	0,529
NL050X050X030	50	3	0,786
NL050X050X040	50	4	1,037
NL050X050X050	50	5	1,282
NL060X060X020	60	2	0,637
NL060X060X040	60	4	1,253
Z 305	60	6	1,846
NL060X060X100	60	10	2,970
NL080X080X060	80	60	2,495

Pandolfo Alluminio

ANGLES

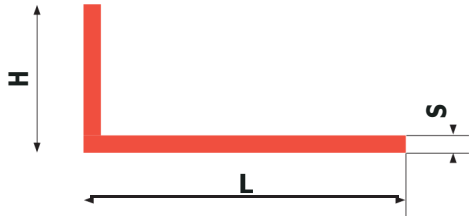

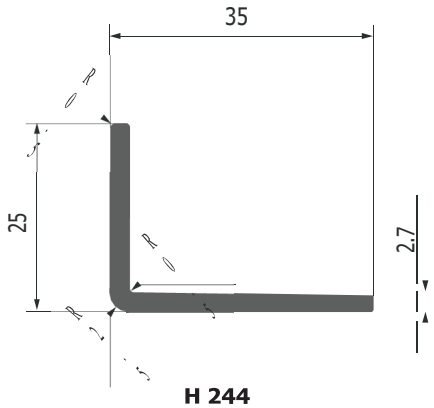

H 244

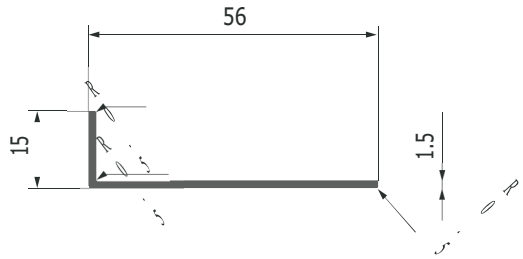

V 1001

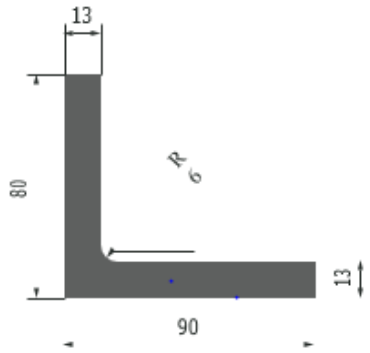

V 1005

Article	L mm	H mm	S mm	Weight kg/m
NL015X010X015	15	10	1,5	0,095
NL025X015X020	25	15	2	0,205
NL025X020X020	25	20	2	0,232
NL030X010X020	30	10	2	0,205
NL030X015X020	30	15	2	0,232
NL030X015X040	30	15	4	0,443
NL030X020X020	30	20	2	0,259
NL030X020X030	30	20	3	0,380
NL035X015X020	35	15	2	0,259
NL035X020X020	35	20	2	0,286
H 244	35	Vedi disegno		0,413
NL040X015X020	40	15	2	0,286
NL040X020X020	40	20	2	0,313
NL040X030X020	40	30	2	0,367
NL040X030X030	40	30	3	0,542
NL050X020X020	50	20	2	0,367
NL050X025X020	50	25	2	0,394
NL050X030X020	50	30	2	0,421
NL050X030X030	50	30	3	0,623
NL050X030X050	50	30	5	1,012
NL050X035X040	50	35	4	0,874
V 1001	56	See drawing		0,281
NL060X020X020	60	20	2	0,421
NL060X030X020	60	30	2	0,476
NL060X040X060	60	40	6	1,522
NL070X030X050	70	30	5	1,283
NL080X020X020	80	20	2	0,529
NL080X030X050	80	30	5	1,418
NL080X040X020	80	40	2	0,637
NL090X050X020	90	50	2	0,748
V 1005	90	See drawing		5,533
NL100X020X020	100	20	2	0,637
NL115X065X050	115	65	5	2,363
NL160X070X050	160	70	50	3,038

Pandolfo Alluminio

CHANNELS

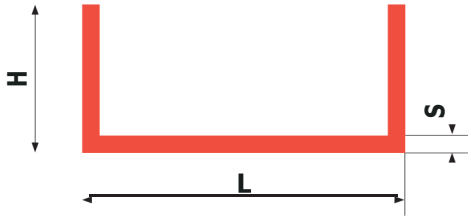

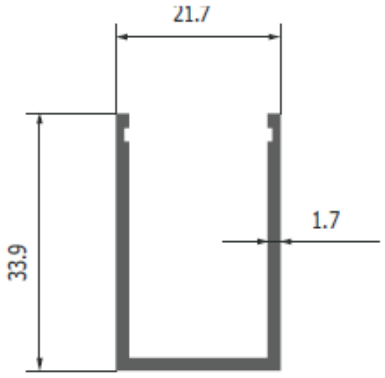

H 328

Article	L mm	H mm	S mm	Weight kg/m
NU015X015X020	15	15	2	0,221
NU015X030X020	15	30	2	0,383
NU020X020X020	20	20	2	0,302
H 328	21,7	See drawing		0,389
NU025X025X020	25	25	2	0,383
NU030X010X020	30	10	2	0,248
NU030X015X020	30	15	2	0,302
NU030X020X020	30	20	2	0,356
NU030X030X020	30	30	2	0,464
NU035X020X020	35	20	2	0,383
V 1010	35	35	2	0,545
NU040X020X020	40	20	2	0,410
NU040X040X015	40	40	1,5	0,470
NU040X040X020	40	40	2	0,626
NU040X040X040	40	40	4	1,210
V 1011	41,8	26	1,4	0,354
H 583	45	30	1,5	0,413
NU050X030X020	50	30	2	0,572
V 1013	50	50	3	1,166
NU060X020X020	60	20	2	0,518
NU060X030X020	60	30	2	0,625
NU060X030X030	60	30	3	0,867
NU060X030X040	60	30	4	1,210
NU060X040X040	60	40	4	1,426
NU080X040X020	80	40	2	0,842
NU100X020X020	100	20	2	0,734
NU100X050X050	100	50	5	2,565
NU100X060X100	100	60	10	5,400
NU165X030X015	16,5	30	1,5	0,298

Pandolfo Alluminio

T-SECTIONS

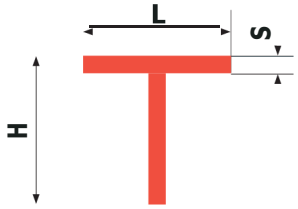

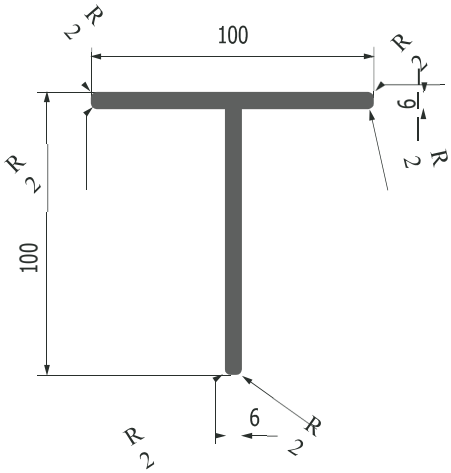

V 1019

Article	L mm	H mm	S mm	Weight kg/m
NT020X020X020	20	20	2	0,205
NT030X030X020	30	30	2	0,313
NT040X020X020	40	20	2	0,313
NT050X050X020	50	50	2	0,529
NT050X050X050	50	50	5	1,282
NT080X100X080	80	100	8	3,715
NT095X120X100	95	120	10	5,535
V 1019	100	See drawing		3,129

Pandolfo Alluminio

DOUBLE T-SECTIONS

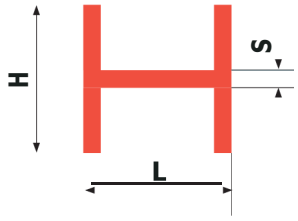

Article	L mm	H mm	S mm	Weight kg/m
V 1026	41	70	2	0,956
F 92	80	see drawing		2,300
V 1027	90	see drawing		3,489

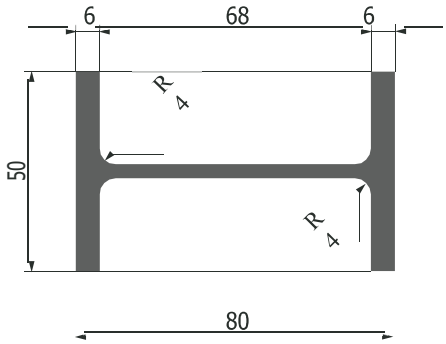

F 92

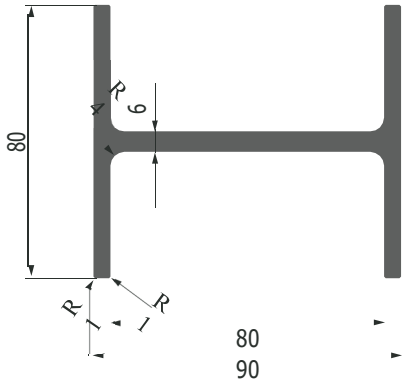

V 1027

S-SECTIONS

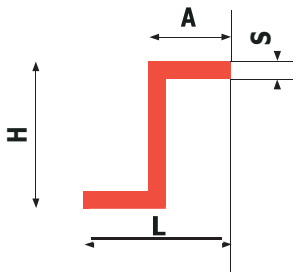

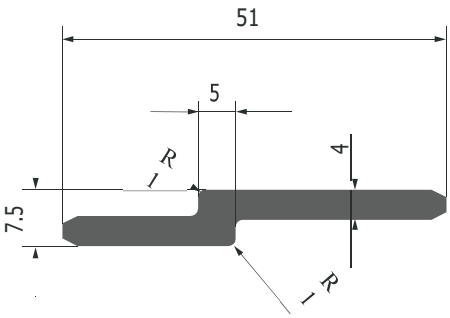

V 1028

Article	L m	H mm	A mm	S mm	Weight kg/m
V 1028	51		See drawing		0,588

Pandolfo Alluminio

ROUND RODS

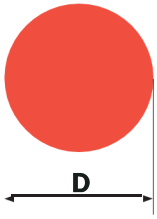

Article	D mm	Weight kg/m
NO008	8	0,136
NO010	10	0,212
NO013	13	0,358
NO015	15	0,477
NO022	22	1,026
NO025	25	1,325
NO030	30	1,909
NO030	30	1,909
NO038	38	3,06
NO040	40	3,393
NO050	50	5,301
NO060	60	7,634
NO070	70	10,385
NO080	80	13,572

SQUARE BARS

Article	L mm	Weight kg/m
NQ012	12	0,389
NQ015	15	0,607
NQ020	20	1,080
NQ025	25	1,687
NQ030	30	2,430
NQ040	40	4,320
NQ050	50	6,750
NQ060	60	9,720
NQ070	70	13,230
NQ080	80	17,280
NQ090	90	21,870

HEXAGON RODS

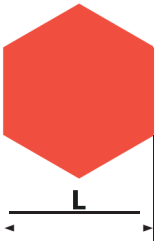

Article	L mm	Weight kg/m
NE013	13	0,395
V 2000	17	0,675
V 2001	19	0,842
V 2002	27	1,704

Pandolfo Alluminio

FLAT BARS

Article	L mm	H mm	Weight kg/m
NP010X020	10	2	0,054
NP010X080	10	8	0,216
NP015X025	15	2,5	0,101
NP015X050	15	5	0,203
NP015X100	15	10	0,405
NP020X030	20	3	0,162
NP020X040	20	4	0,216
NP020X080	20	8	0,432
NP020X100	20	10	0,540
NP020X150	20	15	0,810
NP025X040	25	4	0,270
NP025X050	25	5	0,338
NP025X060	25	6	0,405
NP025X080	25	8	0,540
NP025X100	25	10	0,675
NP025X150	25	15	1,010
NP030X020	30	2	0,162
NP030X030	30	3	0,243
NP030X040	30	4	0,324
NP030X050	30	5	0,405
NP030X060	30	6	0,486
NP030X080	30	8	0,649
NP030X100	30	10	0,810
NP030X150	30	15	1,215
NP030X200	30	20	1,620
NP030X250	30	25	2,025
NP035X040	35	4	0,378
NP035X050	35	5	0,473
NP035X100	35	10	0,945
NP035X150	35	15	1,417
NP040X020	40	2	0,216
NP040X030	40	3	0,324
NP040X040	40	4	0,432
NP040X050	40	5	0,540
NP040X060	40	6	0,648
NP040X080	40	8	0,864
NP040X100	40	10	1,080
NP040X120	40	12	1,296
NP040X150	40	15	1,620
NP040X200	40	20	2,160
NP045X030	45	3	0,364

Pandolfo Alluminio

FLAT BARS

Article	L mm	H mm	Weight kg/m
NP045X050	45	5	0,607
NP045X100	45	10	1,215
V 2006	45	20	2,430
V 2022	48	24,5	3,173
NP050X020	50	2	0,270
NP050X030	50	3	0,405
NP050X040	50	4	0,540
NP050X050	50	5	0,675
NP050X060	50	6	0,810
NP050X080	50	8	1,080
NP050X100	50	10	1,350
NP050X120	50	12	1,620
NP050X150	50	15	2,025
NP050X200	50	20	2,700
NP050X250	50	25	3,375
NP050X300	50	30	4,050
NP060X020	60	2	0,325
NP060X030	60	3	0,486
NP060X040	60	4	0,648
NP060X050	60	5	0,810
NP060X060	60	6	0,972
NP060X080	60	8	1,296
NP060X100	60	10	1,620
Z 257	60	12	1,944
NP060X150	60	15	2,430
NP060X200	60	20	3,250
NP060X300	60	30	4,860
NP065X100	65	10	1,755
NP070X020	70	2	0,378
NP070X030	70	3	0,567
NP070X100	70	10	1,890
NP070X150	70	15	2,835
NP070X200	70	20	3,780
NP070X250	70	25	4,725
NP070X300	70	30	5,670
NP080X020	80	2	0,432
NP080X050	80	5	1,080
NP080X060	80	6	1,296
NP080X080	80	8	1,728
NP080X100	80	10	2,160

Pandolfo Alluminio

FLAT BARS

Article	L mm	H mm	Weight kg/m
NP080X150	80	15	3,240
NP080X200	80	20	4,320
NP080X400	80	40	8,640
NP090X060	90	6	1,458
NP090X080	90	8	1,944
NP090X100	90	10	2,430
NP090X200	90	20	4,860
NP100X020	100	2	0,540
NP100X030	100	3	0,810
NP100X050	100	5	1,350
NP100X060	100	6	1,620
NP100X080	100	8	2,160
NP100X100	100	10	2,700
NP100X120	100	12	3,240
NP100X150	100	15	4,050
NP100X200	100	20	5,400
NP100X300	100	30	8,100
V 2009	120	5	1,615
NP120X080	120	8	2,592
NP120X100	120	10	3,240
NP120X150	120	15	4,860
NP140X080	140	8	3,024
NP150X080	150	8	3,240
NP150X100	150	10	4,050
NP150X120	150	12	4,860
NP150X150	150	15	6,075
NP150X200	150	20	8,100
NP160X080	160	8	3,456
NP200X080	200	8	4,320
NP200X100	200	10	5,400
NP200X150	200	15	8,100
NP200X200	200	20	10,800
NP250X060	250	6	4,050
NP250X250	250	25	16,875

FLAT BARS

Article	L mm	S mm	R mm	Weight kg/m
V 2010	13	8	1	0,279
V 2011	20	10	0,75	0,540
Z 165	42	5	1	0,564
V 2021	90	6	0,7	1,458
Z 125	90	60	1	14,58

OVAL FLAT BARS

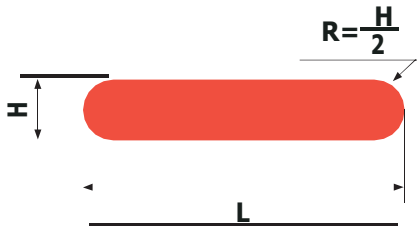

Article	L mm	S mm	R mm	Weight kg/m
V 2018	21,5	6	3	0,33
Z 225	30	3,8	1,9	0,299
Z 224	40	3,8	1,9	0,402
V 2020	40	5	2,5	0,527

Pandolfo Alluminio

SQUARE TUBES

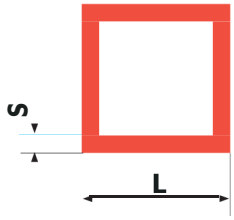

Article	L mm	S mm	Weight kg/m
TQ015X015X015	15	1,5	0,219
TQ020X020X015	20	1,5	0,300
TQ020X020X020	20	2	0,389
TQ025X025X015	25	1,5	0,382
TQ025X025X020	25	2	0,495
TQ025X025X025	25	2,5	0,607
TQ030X030X015	30	1,5	0,464
TQ030X030X020	30	2	0,605
TQ035X035X015	35	1,5	0,546
TQ035X035X020	35	2	0,708
TQ040X040X015	40	1,5	0,629
TQ040X040X020	40	2	0,814
TQ040X040X025	40	2,5	1,012
TQ045X045X020	45	2	0,930
TQ050X050X015	50	1,5	0,794
TQ050X050X020	50	2	1,024
TQ050X050X025	50	2,5	1,282
Z 213	50	4	1,987
TQ060X060X020	60	2	1,252
TQ070X070X020	70	2	1,468
TQ080X080X020	80	2	1,700
V 3057	100	5	5,130

Pandolfo Alluminio

SQUARE TUBES

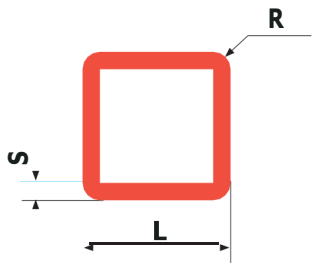

Article	L mm	S mm	R mm	Weight kg/m
V 3002	20	2	2	0,380
N 5	30	1,5	1,5	0,456
V 3007	50	2,35	1	1,207
V 3008	50	See drawing		1,460
V 3009	55	1,9	1,3	1,085
N 425	80	See drawing		1,601

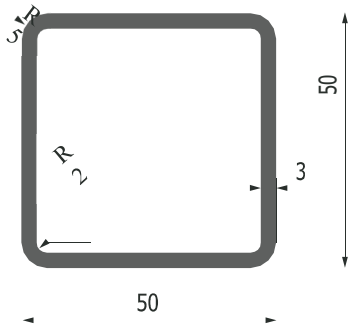

V 3008

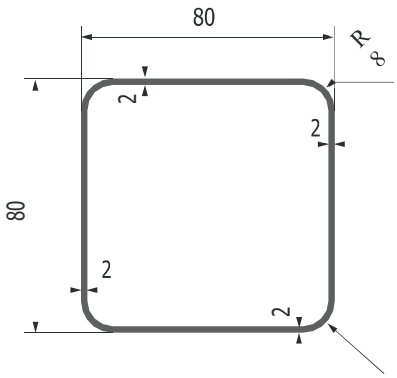

N 425

Pandolfo Alluminio

RECTANGULAR TUBES

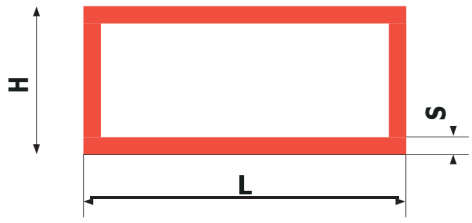

Article	L mm	H mm	S mm	Weight kg/m
TR020X010X015	20	10	1,5	0,219
TR020X015X015	20	15	1,5	0,259
TR025X010X015	25	10	1,5	0,259
TR025X015X015	25	15	1,5	0,299
TR025X015X020	25	15	2	0,346
TR030X010X015	30	10	1,5	0,310
TR030X010X015	30	10	1,5	0,310
TR030X015X015	30	15	1,5	0,340
TR030X015X020	30	15	2	0,443
TR030X020X015	30	20	1,5	0,380
TR030X020X020	30	20	2	0,497
TR035X015X015	35	15	1,5	0,380
TR035X015X020	35	15	2	0,497
TR035X020X020	35	20	2	0,552
TR040X015X015	40	15	1,5	0,420
TR040X015X020	40	15	2	0,551
TR040X020X015	40	20	1,5	0,462
TR040X020X020	40	20	2	0,606
TR040X025X020	40	25	2	0,660
TR050X015X015	50	15	1,5	0,502
TR050X015X020	50	15	2	0,660
TR050X020X020	50	20	2	0,712
TR050X025X020	50	25	2	0,769
TR050X030X020	50	30	2	0,821
TR050X040X020	50	40	2	0,928
TR060X015X015	60	15	1,5	0,580
TR060X020X020	60	20	2	0,821
TR060X030X020	60	30	2	0,928
TR060X040X020	60	40	2	1,038
TR060X040X030	60	40	3	1,523
TR060X040X040	60	40	4	1,987
V 3011	68	36,4	3	1,594
TR070X020X020	70	20	2	0,928
TR070X040X025	70	40	2,5	1,417
TR070X055X040	70	55	4	2,527
TR080X015X015	80	15	1,5	0,745
TR080X020X015	80	20	1,5	0,785
TR080X020X020	80	20	2	1,040
TR080X030X020	80	30	2	1,145
TR080X030X040	80	30	4	2,205
TR080X040X020	80	40	2	1,252
TR080X040X040	80	40	4	2,420
TR080X050X020	80	50	2	1,360
TR100X020X015	100	20	1,5	1,172

Pandolfo Alluminio

RECTANGULAR TUBES

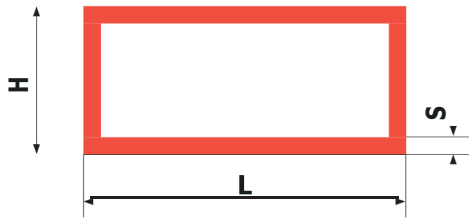

Article	L mm	H mm	S mm	Weight kg/m
TR100X020X020	100	20	2	1,253
TR100X025X017	100	25	1,7	1,115
TR100X030X020	100	30	2	1,360
TR100X030X030	100	30	3	2,008
TR100X040X020	100	40	2	1,470
TR100X040X030	100	40	3	2,170
TR100X050X020	100	50	2	1,576
TR100X050X030	100	50	3	2,333
TR100X050X040	100	50	4	3,067
V 3058	100	60	4	3,283
TR120X015X018	120	15	1,8	1,277
TR120X020X020	120	20	2	1,469
TR120X050X025	120	50	2,5	2,227
TR120X050X040	120	50	4	3,499
TR150X100X060	150	100	6	7,710
V 3012	183,2	50,2	2,2	2,722
TR200X100X040	200	100	4	6,310

Pandolfo Alluminio

RECTANGULAR TUBES

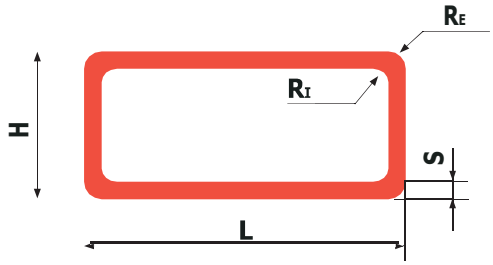

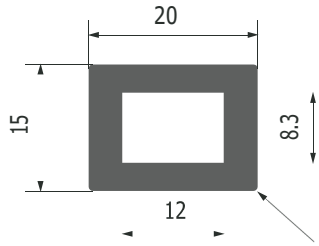

V 3014

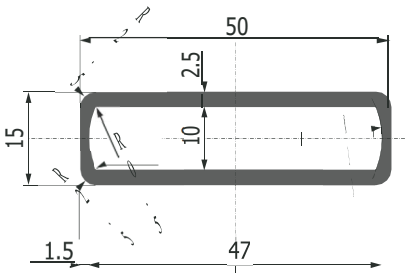

U 248

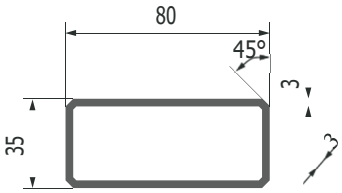

H 1643

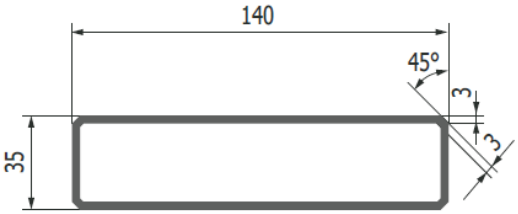

H 1639

Article	L mm	H mm	R_I mm	R_E mm	S mm	Weight kg/m
Z 107	20	10	0,3	0,5	1,2	0,178
V 3014	20		See drawing			0,541
N 654	30	18	1,5	3	1,5	0,348
V 3015	30	20	2	2	1,5	0,373
V 3016	30	24	2	2	1,5	0,402
V 3017	36	20	1,5	3	1,5	0,413
V 3018	40	17,2	0,2	1,5	1,5	0,435
U 248	50		See drawing			0,759
V 3021	50	20	0,2	4	3	1,000
Z 299	60	10	0,2	1	1,5	0,541
N 103	60	30	2	3,5	1,5	0,686
N 63	70	30	0,2	2,5	3	1,509
N 104	80	30	2	3,5	1,5	0,850
H 1643	80		See drawing			1,726
V 3028	100	55	5	8	3	2,325
Z 264	130	70	1	2	3	3,134
H 1639	140		See drawing			2,698
V 3030	150	25	3,5	6	2,5	2,240

Pandolfo Alluminio

ROUND TUBES

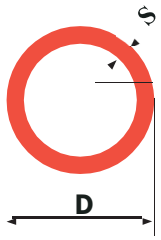

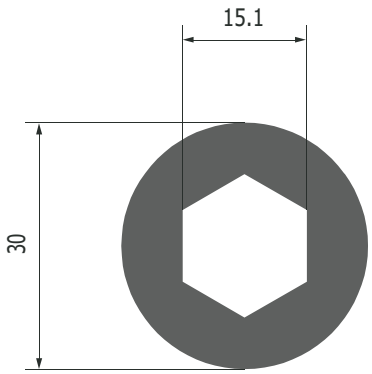

N 520

Article	D mm	S mm	Weight kg/m
TP010X025	10	2,5	0,159
V 3032	14	2	0,203
TP016X020	16	2	0,238
TP018X015	18	1,5	0,210
TP018X020	18	2	0,272
TP020X015	20	1,5	0,235
TP020X020	20	2	0,306
V 3033	20	2,5	0,373
V 3034	20	4,85	0,623
TP022X015	22	1,5	0,261
TP022X020	22	2	0,339
Z 251	25	1,4	0,271
TP025X015	25	1,5	0,299
TP025X020	25	2	0,390
TP025X050	25	5	0,848
V 3036	25	8,4	1,183
TP026X015	26	1,5	0,312
TP027X030	27	3	0,610
TP028X015	28	1,5	0,337
TP028X020	28	2	0,441
TP030X015	30	1,5	0,363
TP030X020	30	2	0,475
TP030X030	30	3	0,686
TP030X040	30	4	0,883
N 520	30	See drawing	1,374
TP032X015	32	1,5	0,388
TP032X035	32	3,5	0,846
TP033X0375	33	3,75	0,930
TP035X015	35	1,5	0,426
TP035X020	35	2	0,560
TP035X020	35	2	0,560
TP035X030	35	3	0,815
TP040X015	40	1,5	0,490
Z252	40	1,8	0,629
TP040X020	40	2	0,645
V 3039	40	3	0,942
TP040X100	40	10	2,545
Z 149	41,8	3	0,988
TP045X020	45	2	0,730
TP045X025	45	2,5	0,900

Pandolfo Alluminio

ROUND TUBES

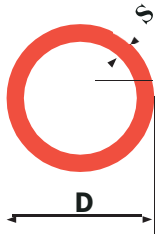

Article	D mm	S mm	Weight kg/m
TP050X015	50	1,5	0,617
TP050X020	50	2	0,814
TP050X030	50	3	1,195
TP050X050	50	5	1,909
TP052X030	52	3	1,250
TP055X020	55	2	0,899
TP055X025	55	2,5	1,113
TP060X015	60	1,5	0,744
TP060X020	60	2	0,984
TP060X025	60	2,5	1,221
TP060X030	60	3	1,450
TP060X040	60	4	1,90
V 3042	68	4	2,172
TP070X050	70	5	2,760
TP075X025	75	2,5	1,538
V 3044	77,5	2,35	1,499
TP080X020	80	2	1,323
TP080X035	80	3,5	2,274
V 3059	80	5	3,181
TP080X100	80	10	5,934
V 3047	85	1,5	1,099
TP090X225	90	22,5	12,876
TP100X020	100	2	1,663
TP100X025	100	2,5	2,068
TP100X050	100	5	4,029
TP100X080	100	8	6,243
TP105X215	105	21,5	15,22
TP110X015	110	1,5	1,380
Z 200	114,3	3	2,762
TP120X030	120	3	2,977
TP120X070	120	7	6,706
TP140X080	140	8	8,958
TP150X080	150	8	9,631
TP152X080	152	8	9,772
V3049	160	3	3,995

OVAL TUBES

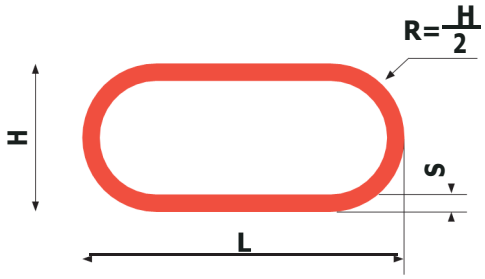

Article	L mm	H mm	S mm	Weight Kg/m
V 3050	22	12	2	0,278
N 666	30	15	1,5	0,294
V 3051	40	20	1,5	0,397
N 30	40	20	2	0,521
N 16	42	22	2,5	0,683
N 259	50	20	2	0,629
V 3060	50	25	2	0,660
N 17	50	30	2	0,691
V 3052	60	10	1,3	0,448
V 3053	180	55	2,5	2,801

HEXAGON TUBES

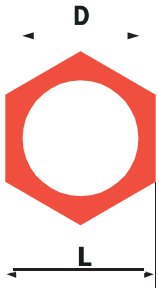

Article	L mm	D mm	Weight kg/m
N 134	30	18,7	1,358

Profiles for special purposes

AUTOMATION AND PNEUMATIC

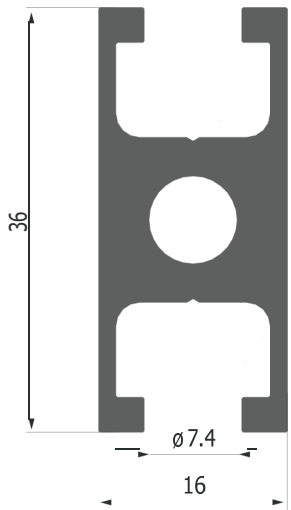

Article	**V 4038**
Weight (Kg/meter)	0,753

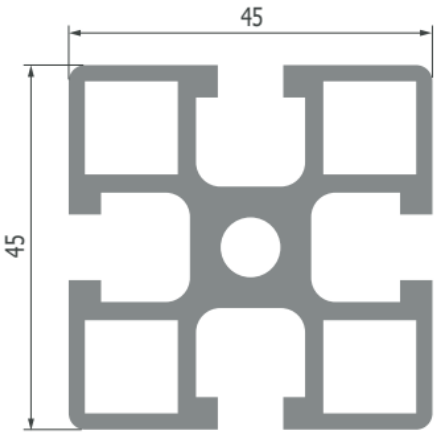

Article	**C 386**
Weight (Kg/meter)	2,002

FURNISHING

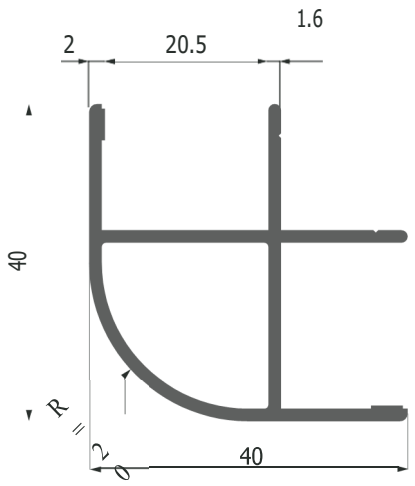

Article	**M 1412**
Weight (Kg/meter)	0,635

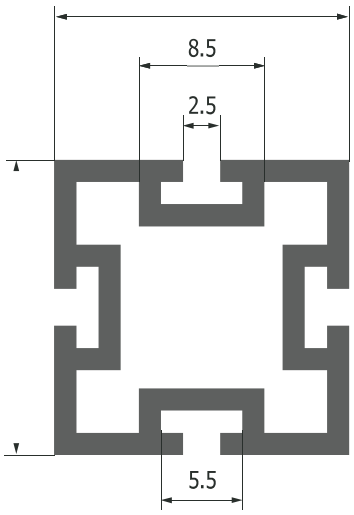

Article	**V 4011**
Weight (Kg/meter)	0,446

AIR CONDITIONING

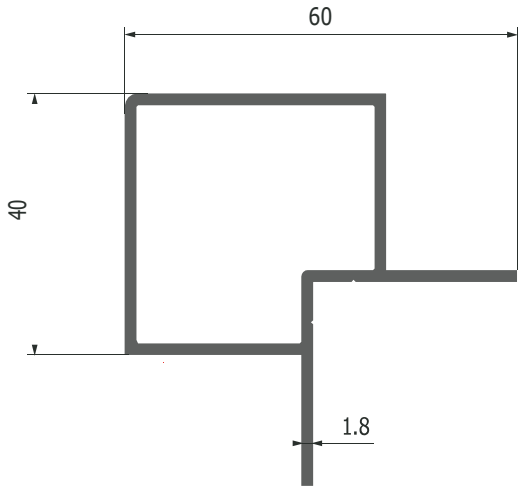

Article	**D 468**
Weight (Kg/meter)	0,937

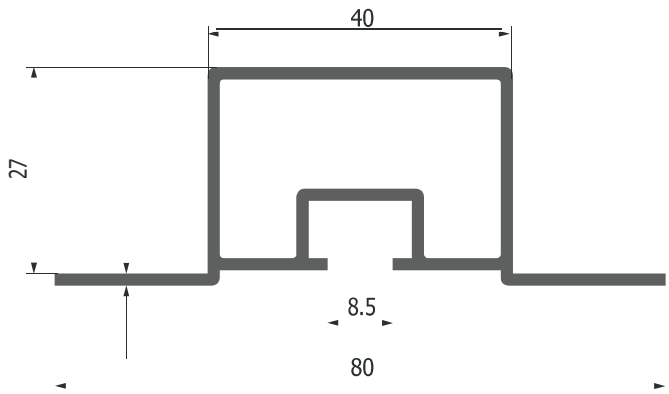

Article	**D 469**
Weight (Kg/meter)	0,837

AIR CONDITIONING

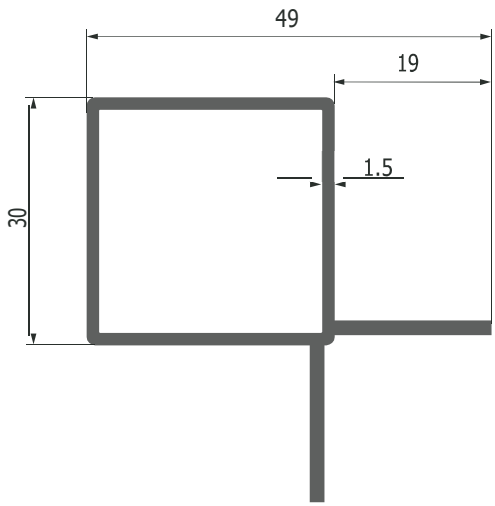

Article	**D 493**
Weight (Kg/meter)	0,645

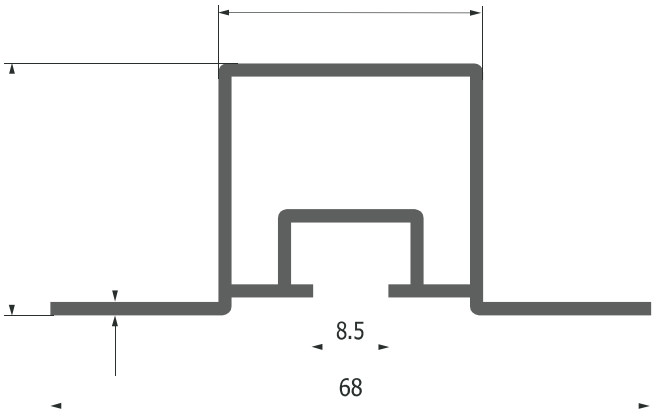

Article	**D 722**
Weight (Kg/meter)	0,688

AIR CONDITIONING

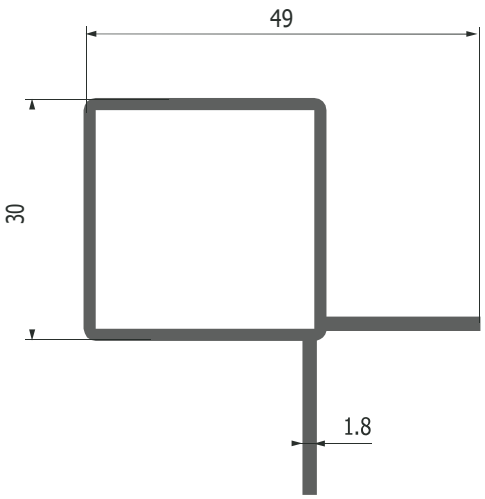

Article	**D 723**
Weight (Kg/meter)	0,643

AIR CONDITIONING

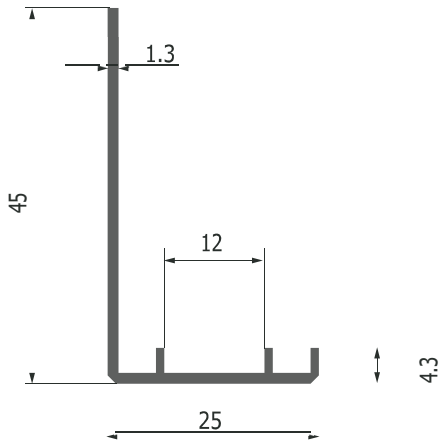

Article	**N 638**
Weight (Kg/meter)	0,267

Pandolfo Alluminio

HEAT SINKS

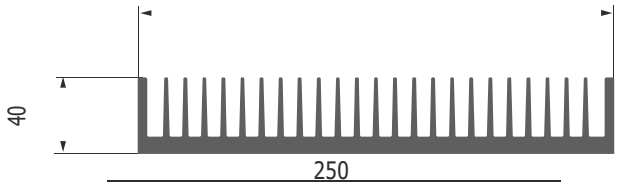

Article	**H 360**
Weight (Kg/meter)	12,156

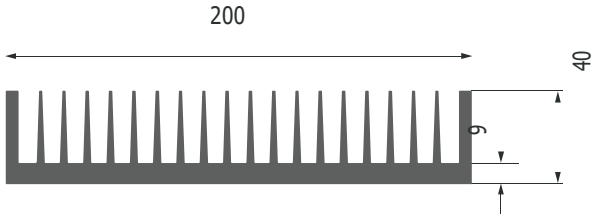

Article	**H 525**
Weight (Kg/meter)	9,504

Pandolfo Alluminio

HEAT SINKS

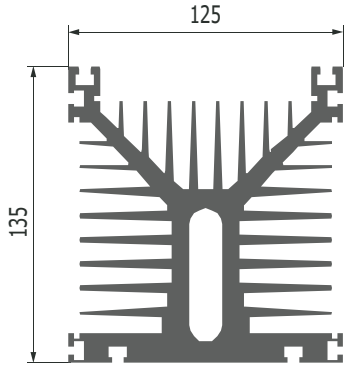

Article	**H 1354**
Weight (Kg/meter)	16,689

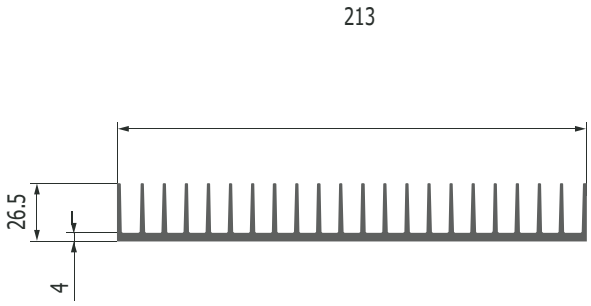

Article	**H 1391**
Weight (Kg/meter)	5,009

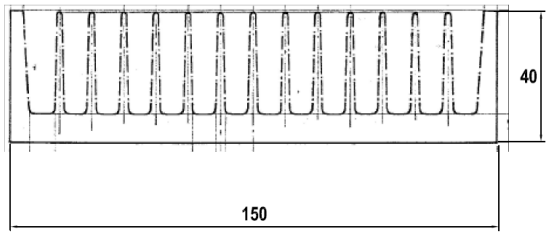

Articolo	**V 2024**
Peso (Kg/metro)	7,355

HEAT SINKS

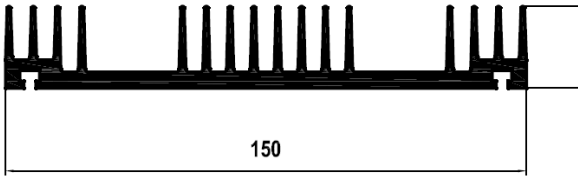

Article	**V 2027**
Weight (Kg/meter)	3,135

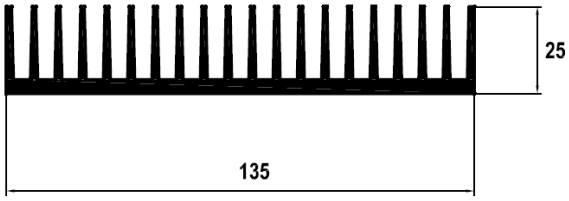

Article	**V 2028**
Weight (Kg/meter)	3,187

HEAT SINKS

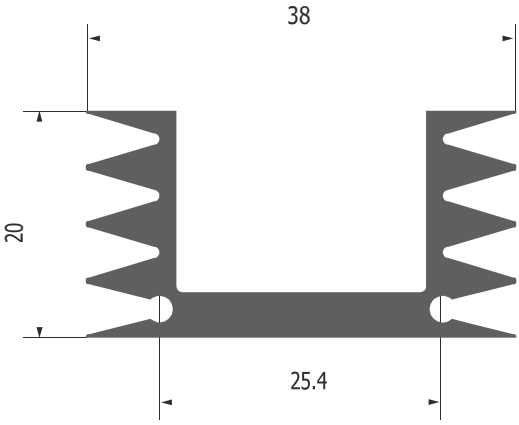

Article	**V 4016**
Weight (Kg/meter)	0,694

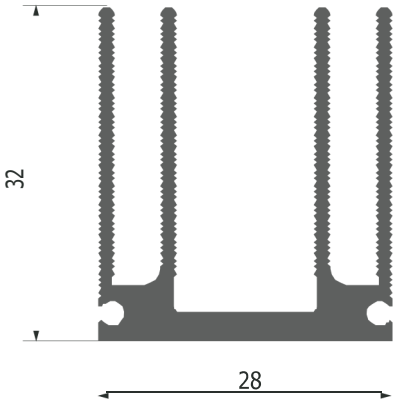

Article	**V 4017**
Weight (Kg/meter)	0,675

HEAT SINKS

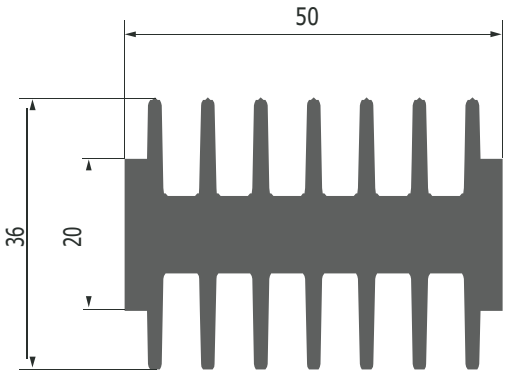

Article	**V 4018**
Weight (Kg/meter)	2,489

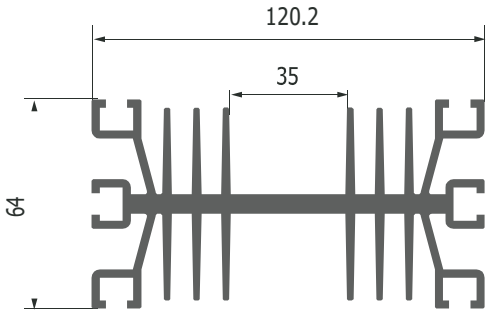

Article	**V 4019**
Weight (Kg/meter)	5,792

Pandolfo Alluminio

HEAT SINKS

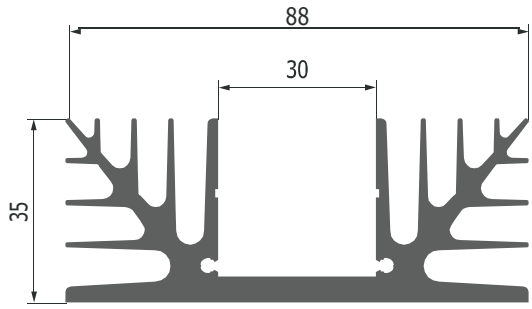

Article	**V 4021**
Weight (Kg/meter)	2,735

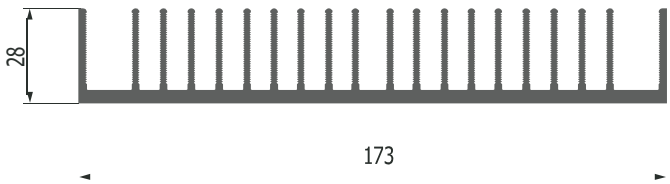

Article	**V 4022**
Weight (Kg/meter)	4,514

HEAT SINKS

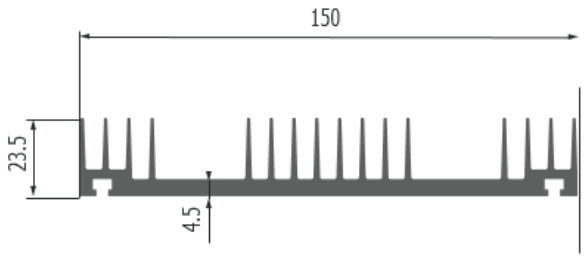

Article	**V 4027**
Weight (Kg/meter)	3,091

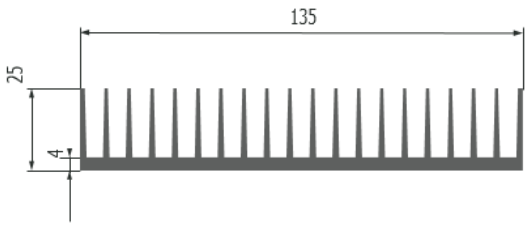

Article	**V 4028**
Weight (Kg/meter)	3,189

SIGNAGE

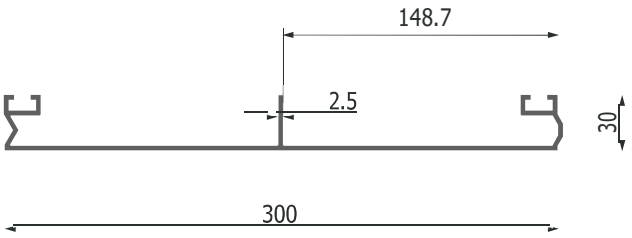

Article	**D 498**
Weight (Kg/meter)	3,040

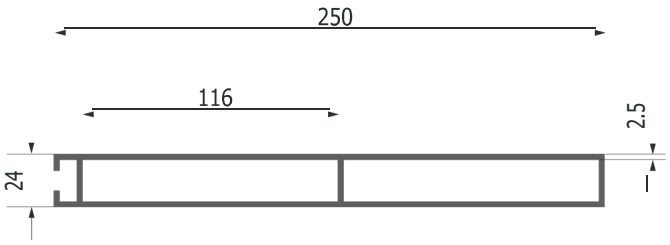

Article	**D 551**
Weight (Kg/meter)	3,828

Pandolfo Alluminio

SIGNAGE

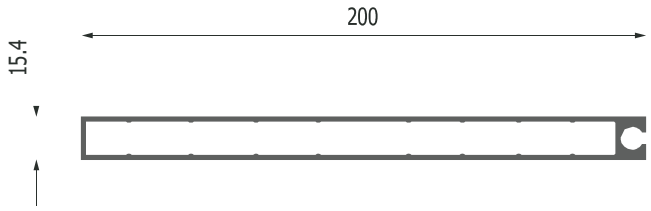

Article	**D 816**
Weight (Kg/meter)	2,221

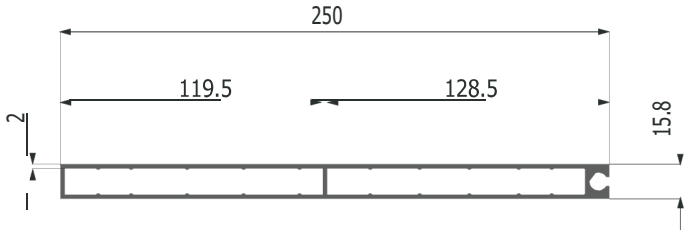

Article	**V 4036**
Weight (Kg/meter)	3,059

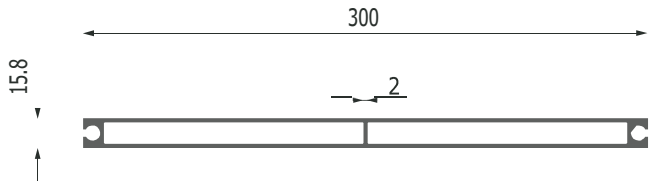

Article	**V 4037**
Weight (Kg/meter)	4,082

AWNINGS, SHUTTERS, BLINDS AND SHADES

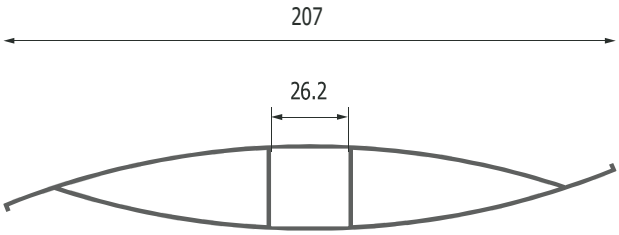

Article	**N 534**
Weight (Kg/meter)	1,899

AWNINGS, SHUTTERS, BLINDS AND SHADES

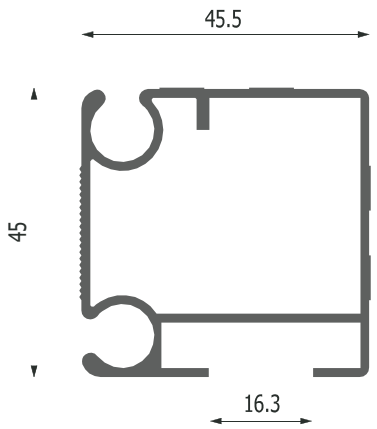

Article	**0 308**
Weight (Kg/meter)	0,901

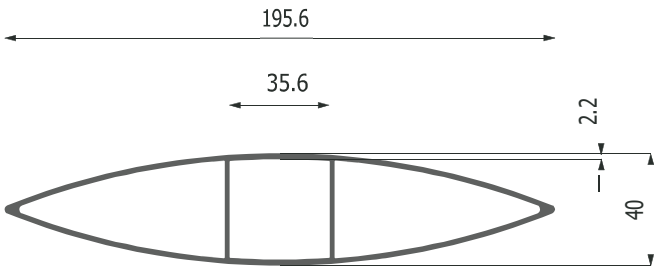

Article	**P 980**
Weight (Kg/meter)	2,438

OTHER

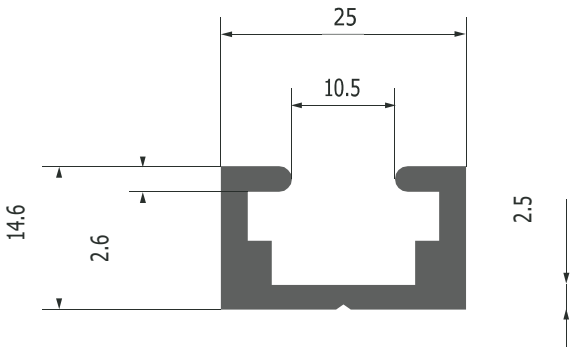

Article	**H 25**
Weight (Kg/meter)	0,467

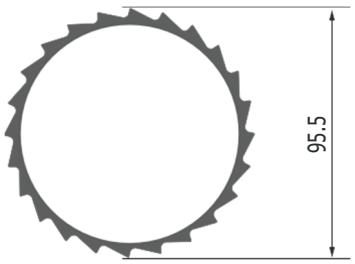

Article	**H 888**
Weight (Kg/meter)	3,067

OTHER

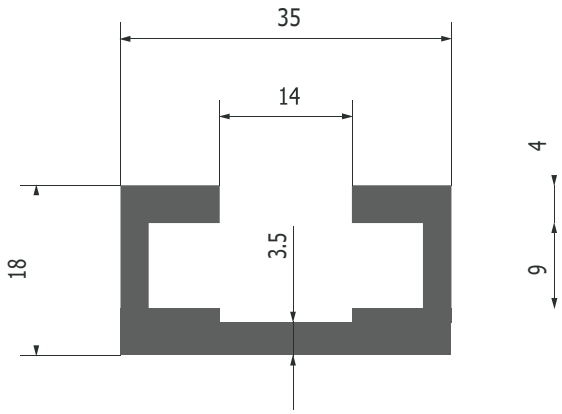

Article	**N 22**
Weight (Kg/meter)	0,788

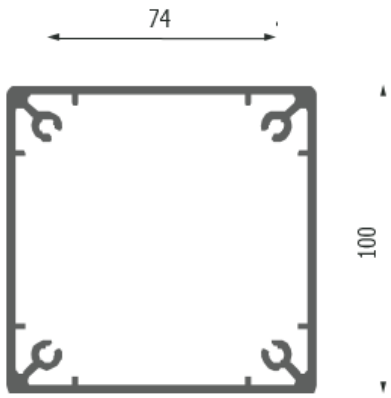

Article	**P 1094**
Weight (Kg/meter)	4,098

Pandolfo Alluminio

OTHER

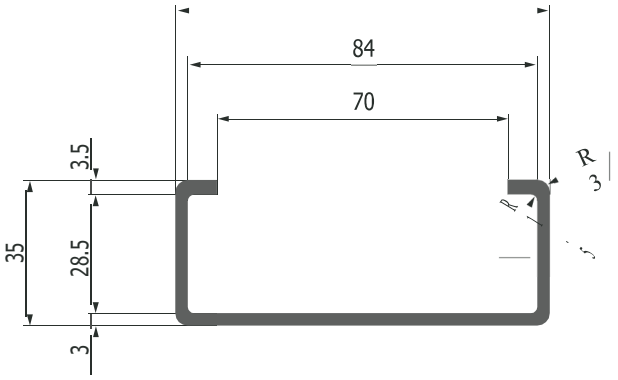

Article	**V 4004**
Weight (Kg/meter)	0,832

PandolfoAlluminio

HEADQUARTERS AND ADMINISTRATIVE OFFICES
Via della Provvidenza, 143
35030 Rubano (PD) - Italy
Tel. +39 049 82 26 000
Fax +39 049 82 26 050
www.pandolfoalluminio.com
info@pandolfoalluminio.com

Sales Commerciali
Via Camp Longc, 23
32032 Feltre (BL) - Italy

Italiy

Sales Office Italy
Tel. +39 0439 84 87 86
Fax +39 0439 84 87 87
sales@pandolfoalluminio.com

Sales Departments

Sales Office-Export
Tel. +39 0439 84 87 85
Fax +39 0439 84 87 88
export@pandolfoalluminio.com

REV 01/02/2019